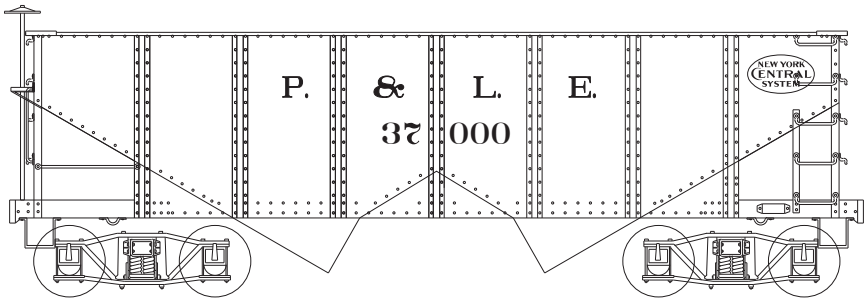
P. & L. E.
37 000
NEW YORK CENTRAL SYSTEM

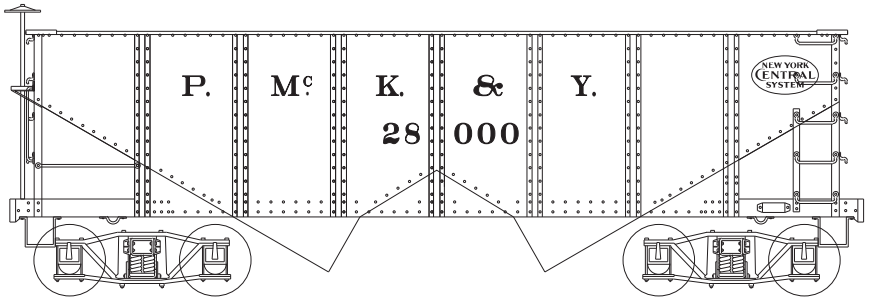
P. Mc. K. & Y.
28 000
NEW YORK CENTRAL SYSTEM

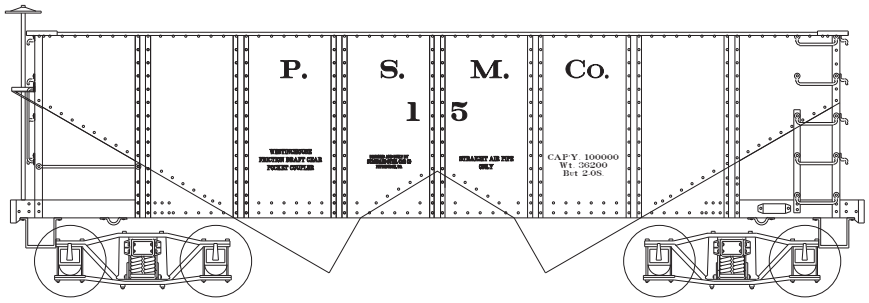
P. S. M. Co.
1 5
WESTINGHOUSE
FRICTION DRAFT GEAR
POCKET COUPLER
STRAIGHT AIR PIPE
ONLY
CAPY. 100000
Wt. 36200
Bet 2-08.

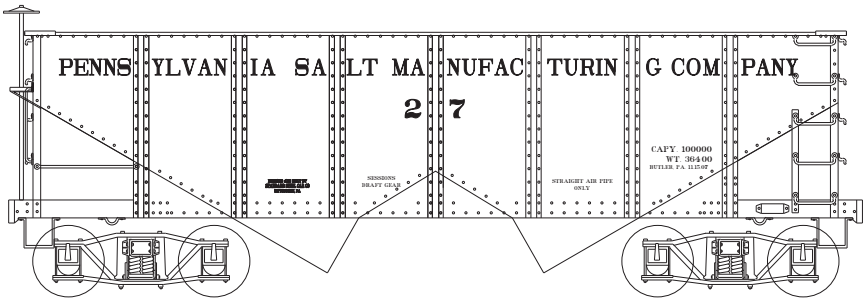
PENNS YLVAN IA SA LT MA NUFAC TURIN G COM PANY
2 7
SESSIONS
DRAFT GEAR
STRAIGHT AIR PIPE
ONLY
CAPY. 100000
WT. 36400
BUTLER PA 11-2-47

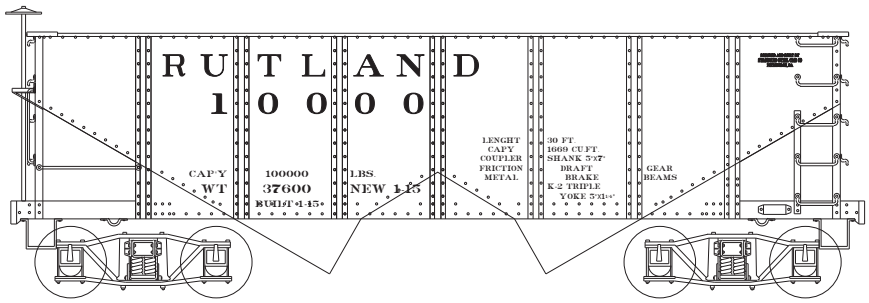
R U T L A N D
1 0 0 0 0
CAP'Y 100000
WT 37600 LBS.
BUILT 1-45 NEW 1-15
LENGHT 30 FT
CAPY 1669 CU.FT.
COUPLER SHANK 5"x7"
FRICTION DRAFT
METAL BRAKE
K-2 TRIPLE
YOKE 5"x1½"
GEAR
BEAMS

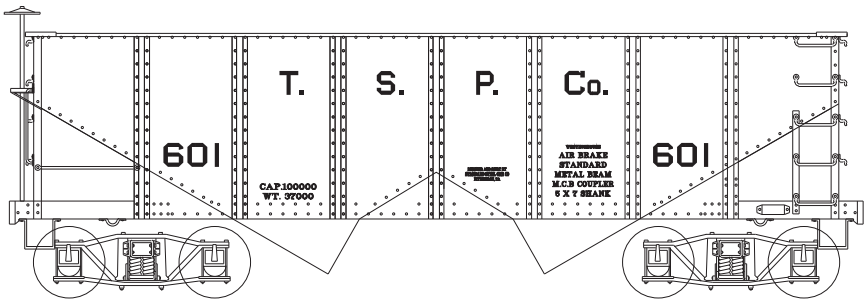
T. S. P. Co.
601
601
CAP.100000
WT. 37000
WESTINGHOUSE
AIR BRAKE
STANDARD
METAL BEAM
M.C.B COUPLER
6 X 8 SHANK